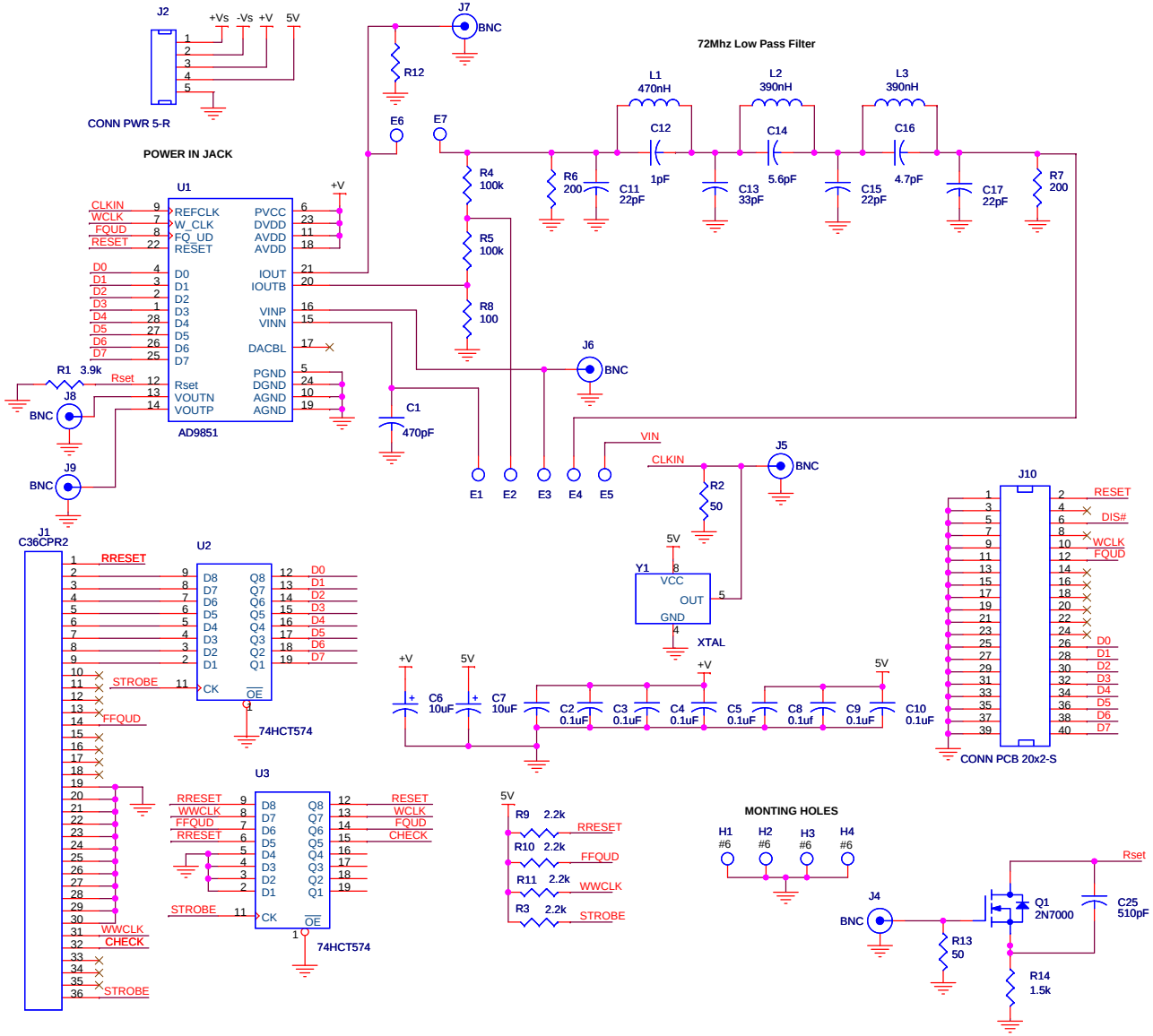

AD9851 Demo Board			
Title: AD9851DBK			
Size: B	Document Number: ADIRF9851001		Rev: A
Date: Thursday, April 27, 2006	Sheet 1 of 1		