ROTARY ENCODER INTERFACE

PCB IS ON THE "BPF" PANEL BY VK3PE. APRIL 2008

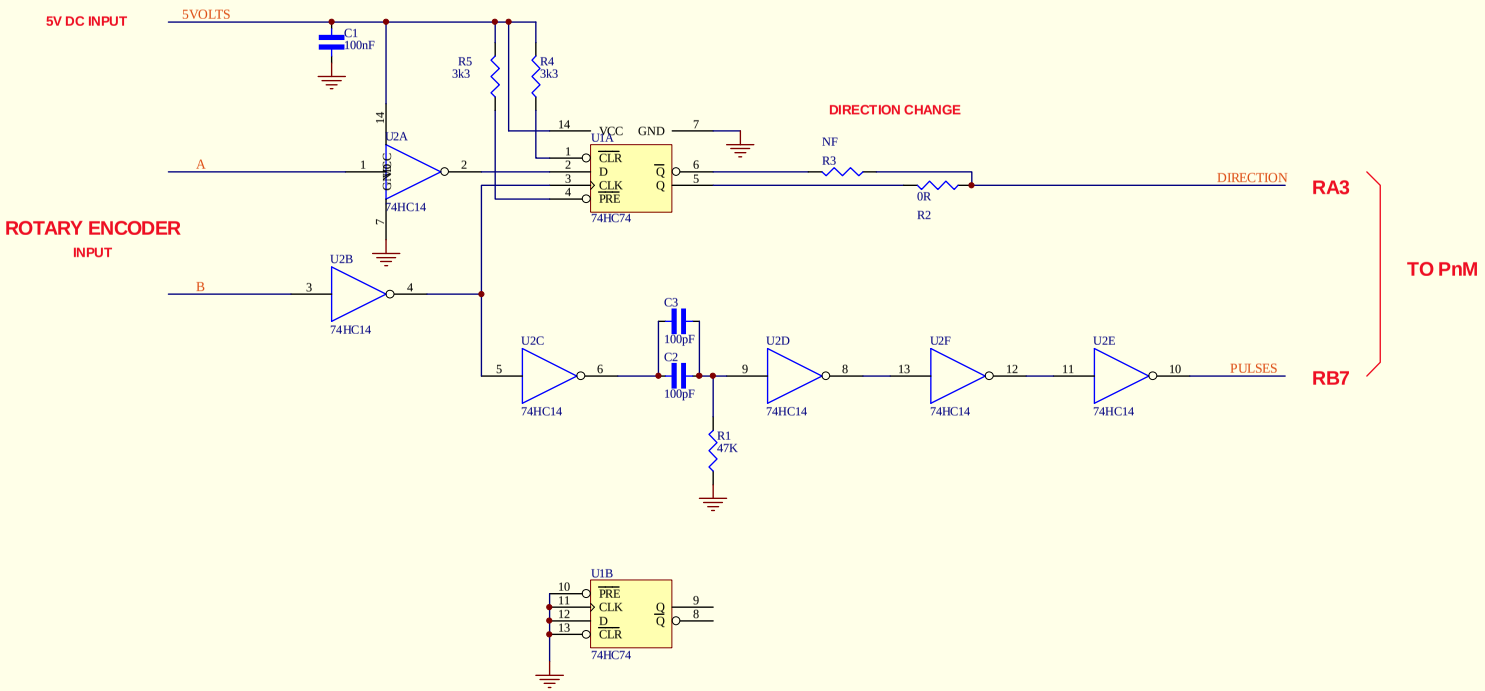

23-04-08 ,IMOR UPDATE

290208 ROTARY ENCODER INTERFACE BY G3VPX

Sheet:	~~PICaSTAR SCHEMATICS BY VK3PE & C.S. BASED ON ORIGINALS (C) BY G3XJP~~
0 of 0	TITLE:- E:\ROT-ENC Ian's\A OPTO\OPTO-ENCODER-G3VPX_120308.Sch
	For Oct 2007 "VK3PE PCBS" Vers

E:\ROT-ENC Ian's\A OPTO\OPTO-ENCODER-G3VPX_120308.Sch

Document Produced by deskPDF Unregistered: http://www.docudesk.com