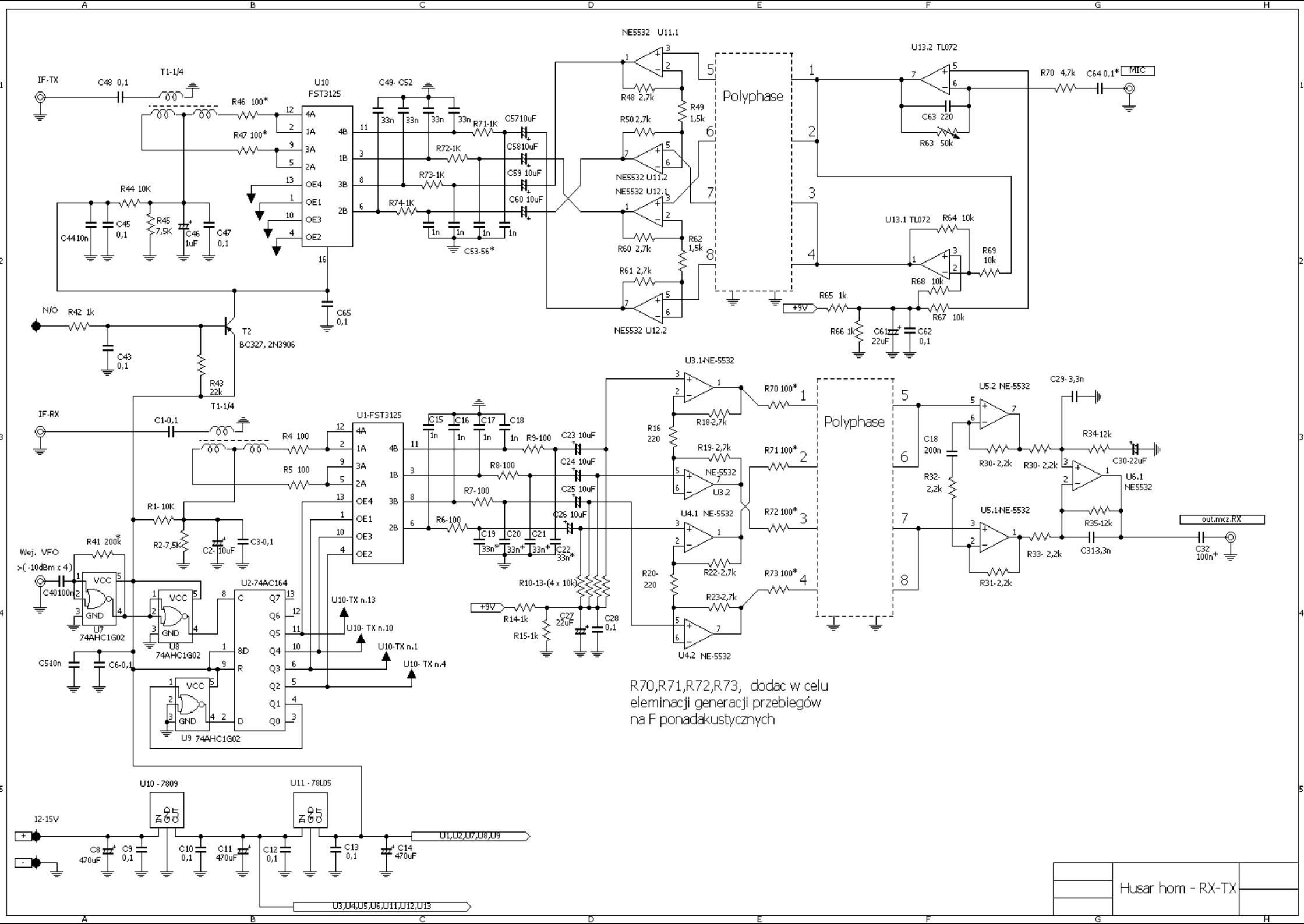
IF-TX
C48 0,1
T1-1/4
R46 100*
R47 100*
U10
FST3125
C49- C52
33n
R71-1K
R72-1K
R73-1K
R74-1K
C5710uF
C5810uF
C59 10uF
C60 10uF
C53-56*
1n
R44 10K
C4410n
C45 0,1
R45 7,5K
C46 1uF
C47 0,1
C65 0,1
NE5532 U11.1
R48 2,7k
R49 1,5k
R50 2,7k
NE5532 U11.2
NE5532 U12.1
R60 2,7k
R62 1,5k
R61 2,7k
NE5532 U12.2
Polyphase
U13.2 TL072
R70 4,7k
C64 0,1*
MIC
C63 220
R63 50k
U13.1 TL072
R64 10k
R69 10k
R68 10k
R67 10k
R65 1k
+9V
R66 1k
C61 22uF
C62 0,1
N/O
R42 1k
C43 0,1
T2
BC327, 2N3906
R43 22k
IF-RX
C1-0,1
T1-1/4
R4 100
R5 100
U1-FST3125
C15
C16
C17
C18
R9-100
R8-100
R7-100
R6-100
C23 10uF
C24 10uF
C25 10uF
C26 10uF
C19
C20
C21
C22 33n*
33n*
R1- 10K
R2-7,5K
C2- 10uF
C3-0,1
R41 200k*
Wej. VFO
>(-10dBm x 4)
C40100n
VCC
GND
U7
74AHC1G02
U8
74AHC1G02
U9 74AHC1G02
C510n
C6-0,1
U2-74AC164
U10-TX n.13
U10- TX n.10
U10-TX n.1
U10- TX n.4
R10-13-(4 x 10k)
R14-1k
R15-1k
C27 22uF
C28 0,1
U3.1-NE-5532
R16 220
R18-2,7k
R19- 2,7k
NE-5532
U3.2
U4.1 NE-5532
R20- 220
R22-2,7k
R23-2,7k
U4.2 NE-5532
R70 100*
R71 100*
R72 100*
R73 100*
U5.2 NE-5532
C29- 3,3n
C18 200n
R32- 2,2k
R30- 2,2k
R34-12k
C30-22uF
U6.1 NE5532
U5.1-NE-5532
R35-12k
C313,3n
R33- 2,2k
R31-2,2k
out.mcz.RX
C32 100n*
R70,R71,R72,R73, dodac w celu
eleminacji generacji przebiegów
na F ponadakustycznych
U10 - 7809
U11 - 78L05
IN
OUT
GND
12-15V
C8 470uF
C9 0,1
C10 0,1
C11 470uF
C12 0,1
C13 0,1
C14 470uF
U1,U2,U7,U8,U9
U3,U4,U5,U6,U11,U12,U13
Husar hom - RX-TX