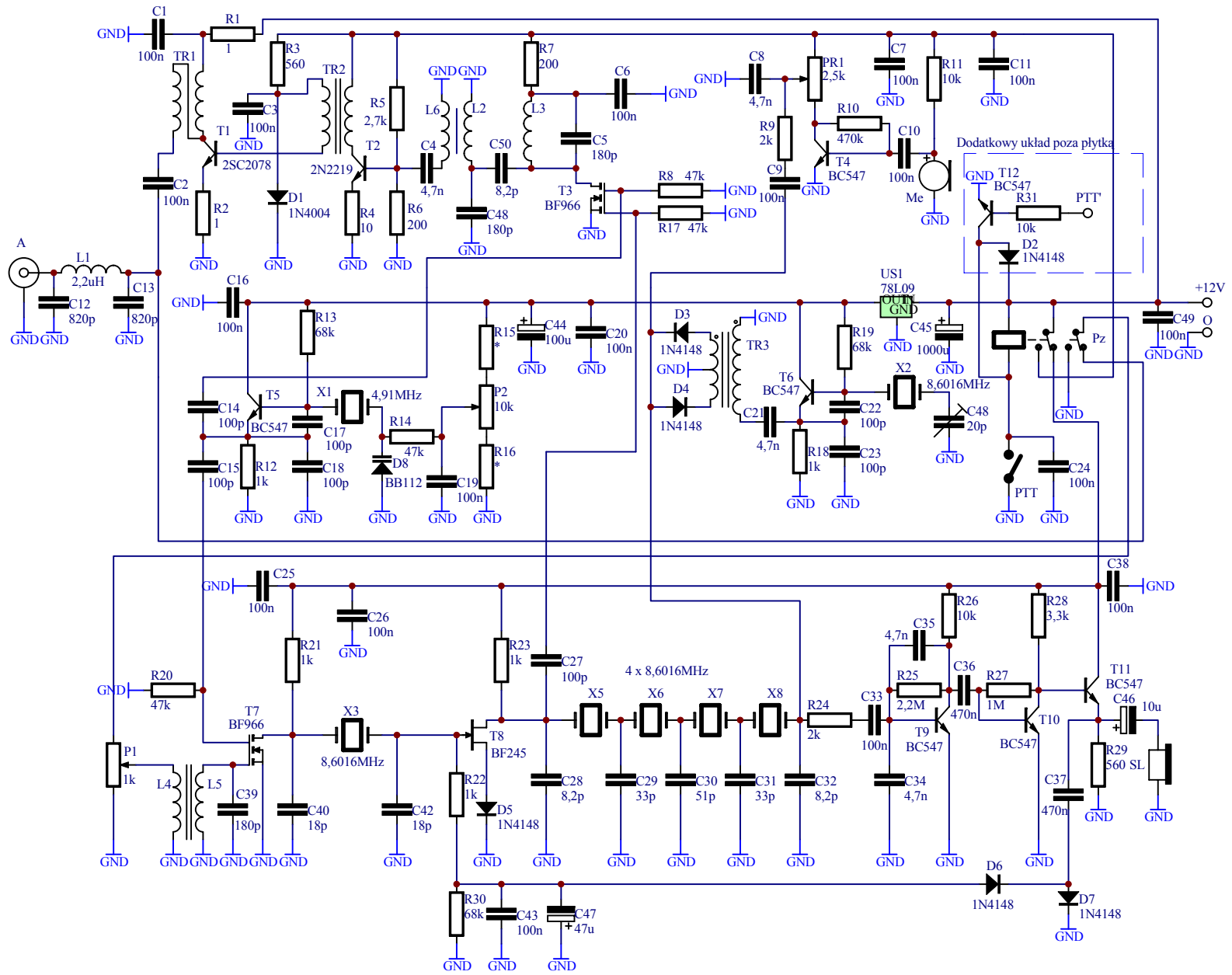
C1
100n
R1
1
TR1
R3
560
TR2
C3
100n
T1
2SC2078
C2
100n
R2
1
D1
1N4004
2N2219
T2
R5
2,7k
R4
10
R6
200
C4
4,7n
L6
L2
C50
8,2p
C48
180p
R7
200
L3
C5
180p
C6
100n
T3
BF966
R8 47k
R17 47k
C8
4,7n
PR1
2,5k
R9
2k
C9
100n
R10
470k
T4
BC547
C7
100n
R11
10k
C11
100n
C10
100n
Me
Dodatkowy układ poza płytka
T12
BC547
R31
10k
PTT'
D2
1N4148
A
L1
2,2uH
C12
820p
C13
820p
C16
100n
R13
68k
R15
*
C44
100u
C20
100n
D3
1N4148
D4
1N4148
TR3
US1
78L09
OUT
IN
GND
C45
1000u
R19
68k
T6
BC547
C21
4,7n
C22
100p
X2
8,6016MHz
C48
20p
R18
1k
C23
100p
C24
100n
PTT
Pz
C49
100n
+12V
O
T5
BC547
X1
4,91MHz
C14
100p
C17
100p
R14
47k
D8
BB112
C15
100p
R12
1k
C18
100p
C19
100n
P2
10k
R16
*
C25
100n
C26
100n
R21
1k
R23
1k
C27
100p
4 x 8,6016MHz
X5
X6
X7
X8
R24
2k
C33
100n
C35
4,7n
R25
2,2M
C36
470n
R26
10k
R27
1M
R28
3,3k
T9
BC547
T10
BC547
T11
BC547
C46
10u
C38
100n
R20
47k
T7
BF966
X3
8,6016MHz
T8
BF245
P1
1k
L4
L5
C39
180p
C40
18p
C42
18p
R22
1k
D5
1N4148
C28
8,2p
C29
33p
C30
51p
C31
33p
C32
8,2p
C34
4,7n
C37
470n
R29
560 SL
D6
1N4148
D7
1N4148
R30
68k
C43
100n
C47
47u
GND