VX-5R Circuit Diagram

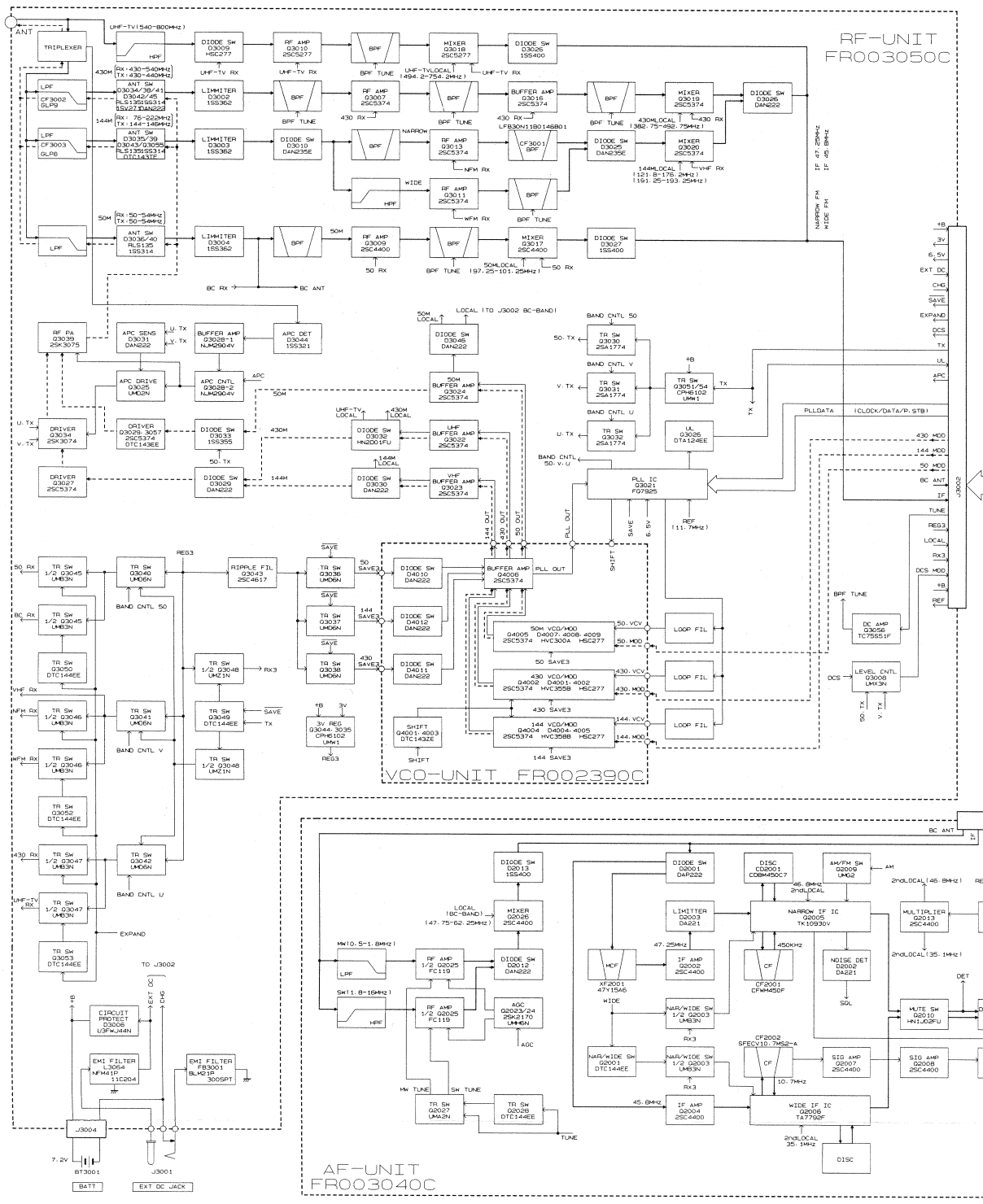

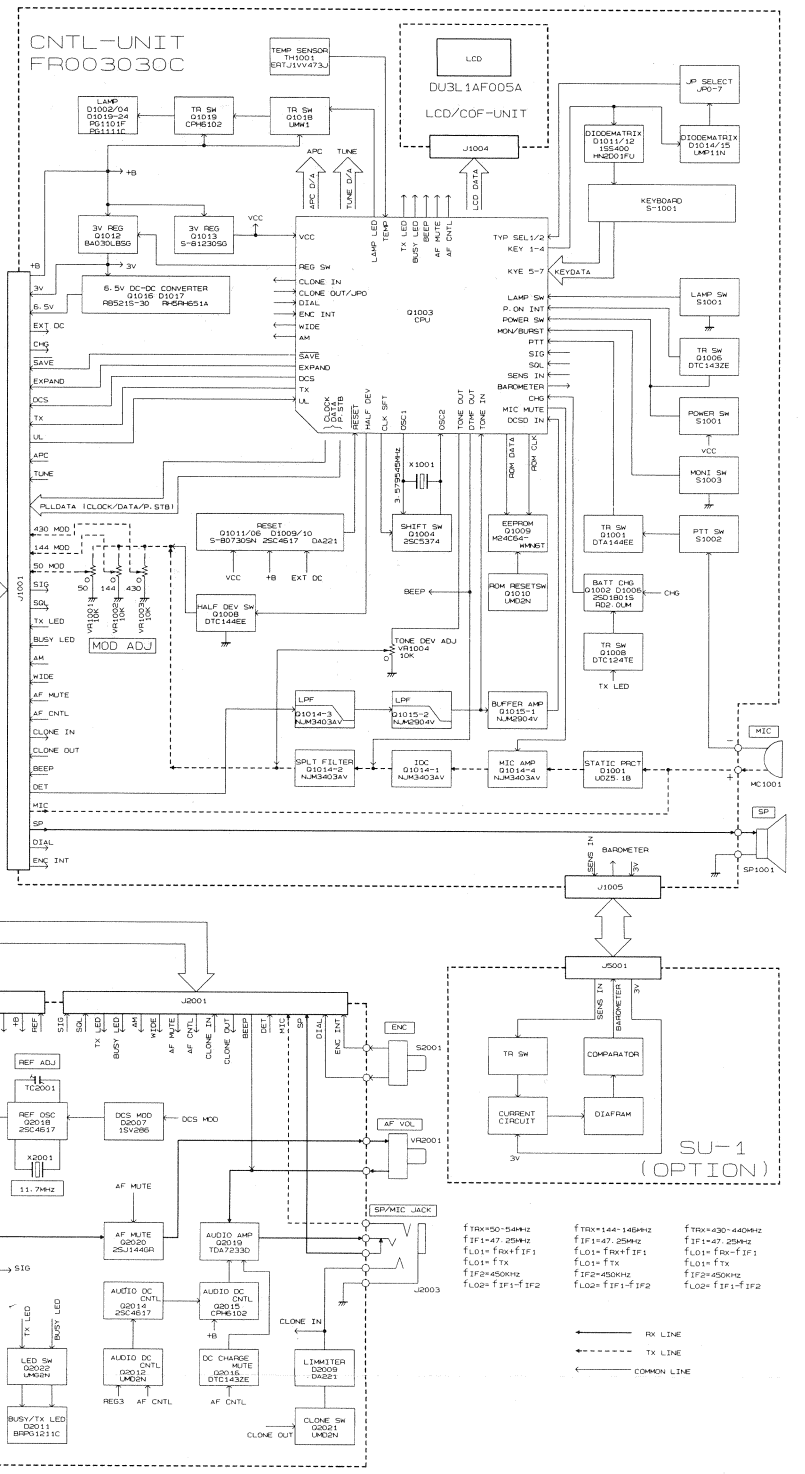

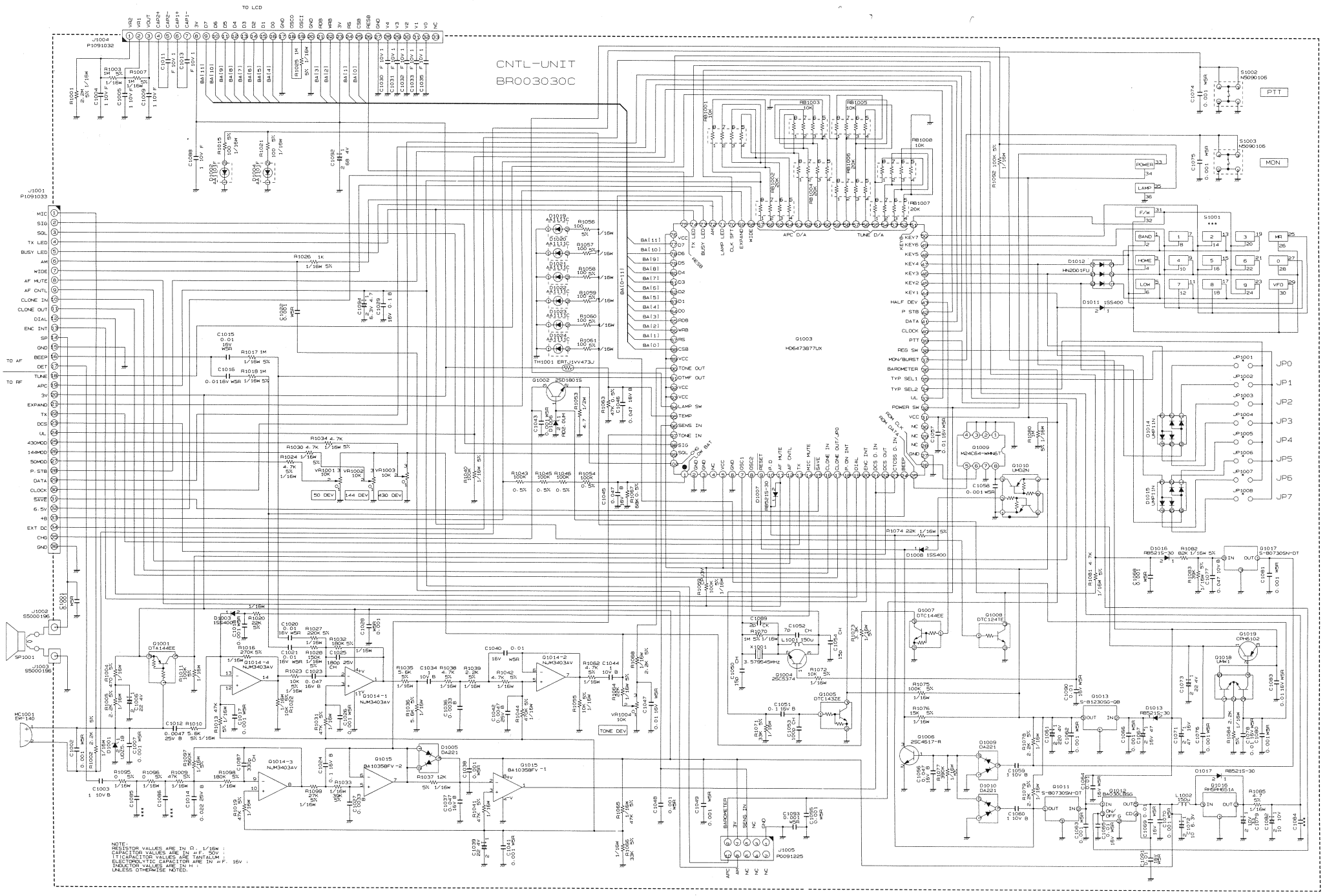

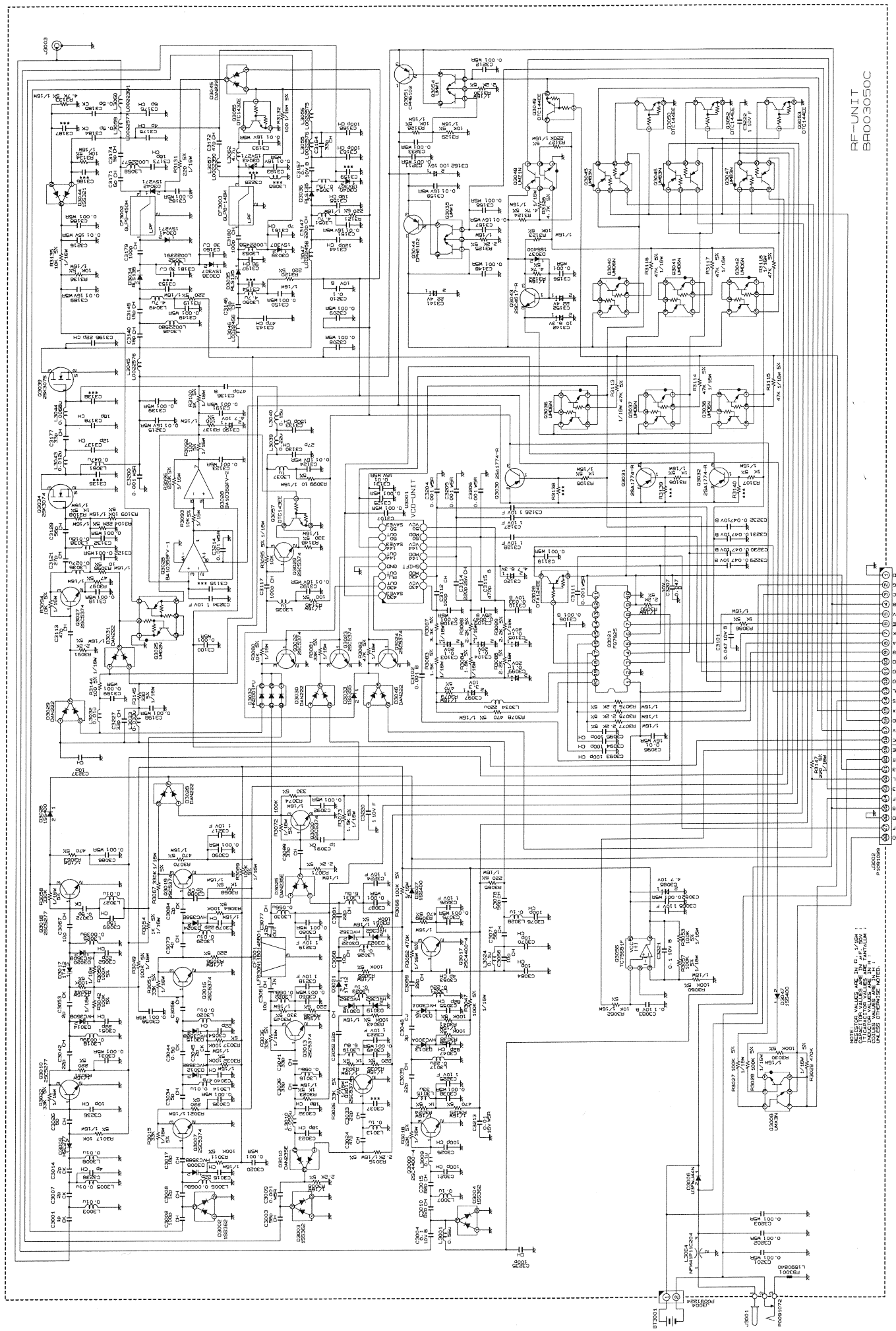

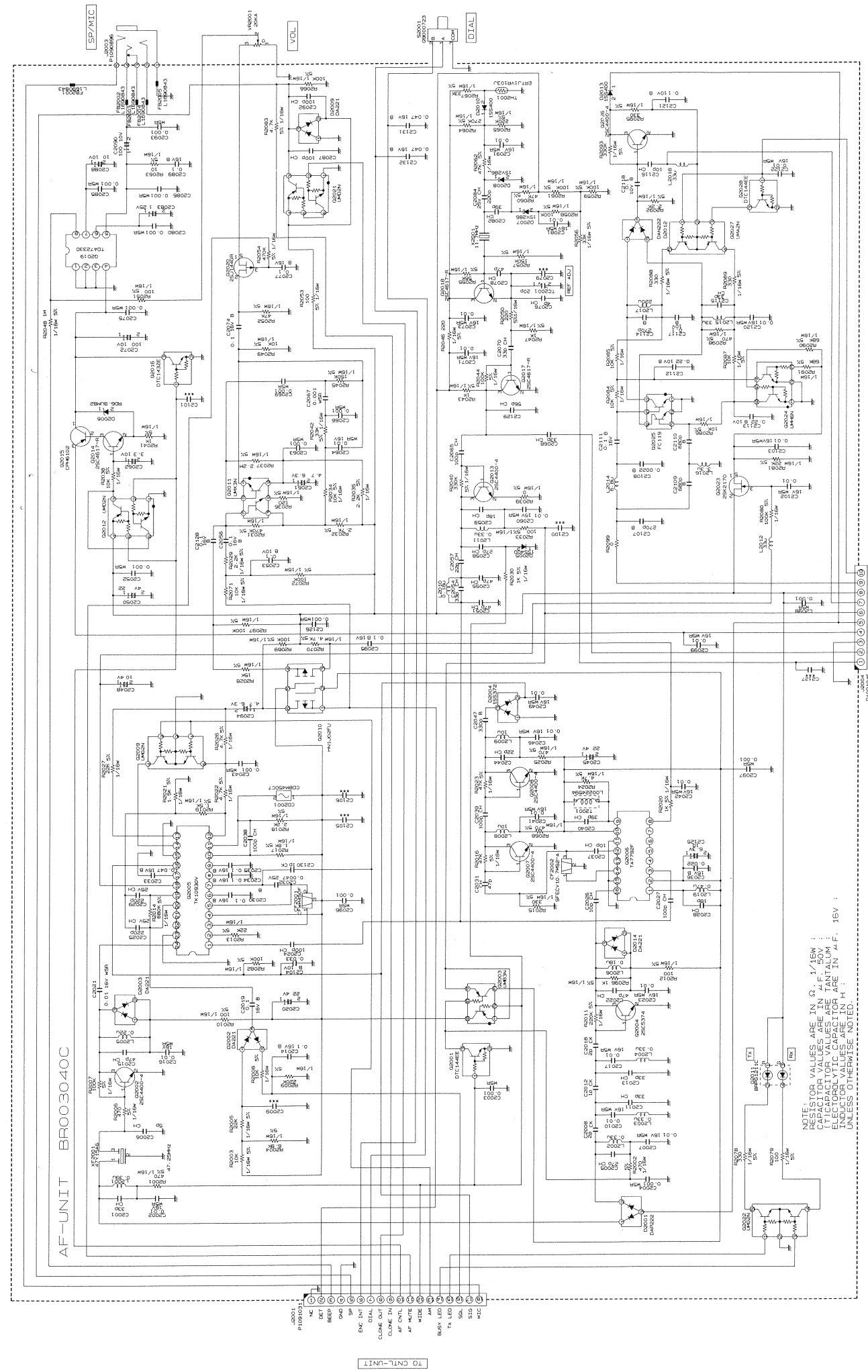

NOTE:
RESISTOR VALUES ARE IN Ω, 1/16W ;
CAPACITOR VALUES ARE IN μF, 50V ;
TRIMMER CAPACITOR ARE IN μF ;
ELECTROLYTIC CAPACITOR ARE IN μF, 16V ;
INDUCTOR VALUES ARE IN H ;
UNLESS OTHERWISE NOTED.