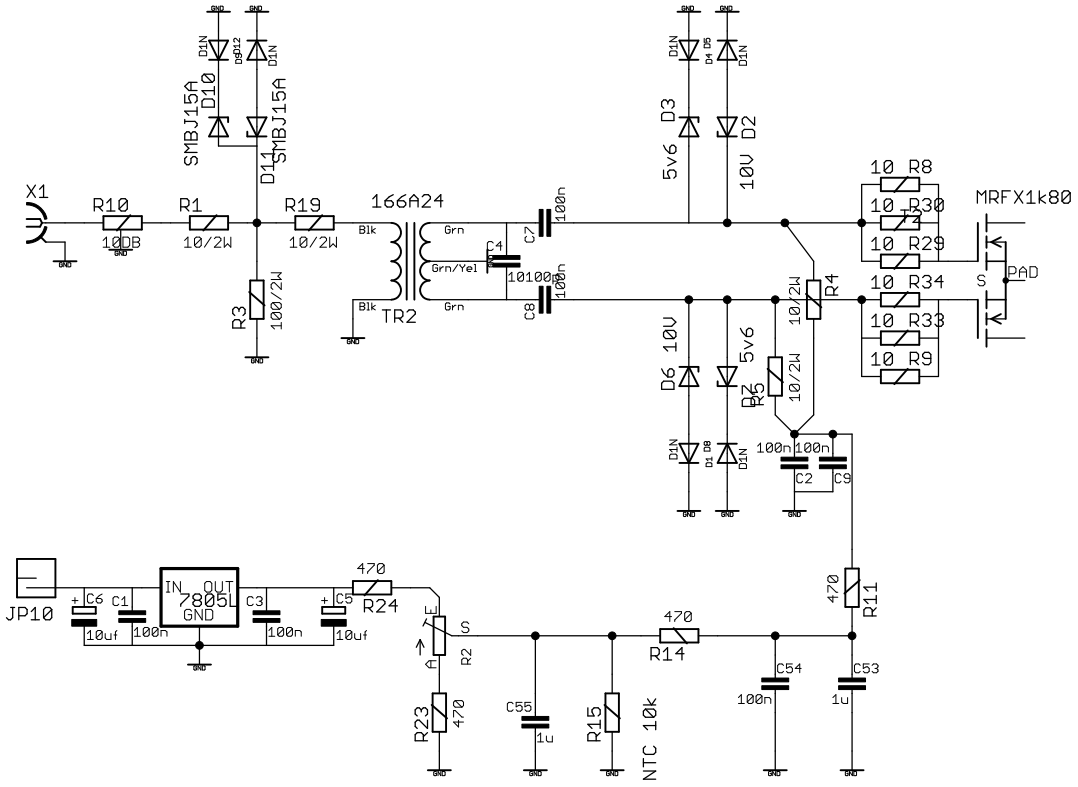
X1
R10
10DB
R1
10/2W
R19
10/2W
R3
100/2W
SMBJ15A
D10
D11
SMBJ15A
166A24
TR2
Blk
Grn
Grn/Yel
Grn
Blk
C4
10
C7
100n
C8
100n
100n
D3
5v6
D2
10V
D6
10V
D7
5v6
R5
10/2W
R4
10/2W
10 R8
10 R30
10 R29
10 R34
10 R33
10 R9
MRFX1k80
PAD
S
100n
100n
C2
C9
JP10
C6
10uf
C1
100n
IN
OUT
7805L
GND
C3
100n
C5
10uf
470
R24
R2
S
A
R23
470
C55
1u
R15
NTC 10k
470
R14
C54
100n
470
R11
C53
1u