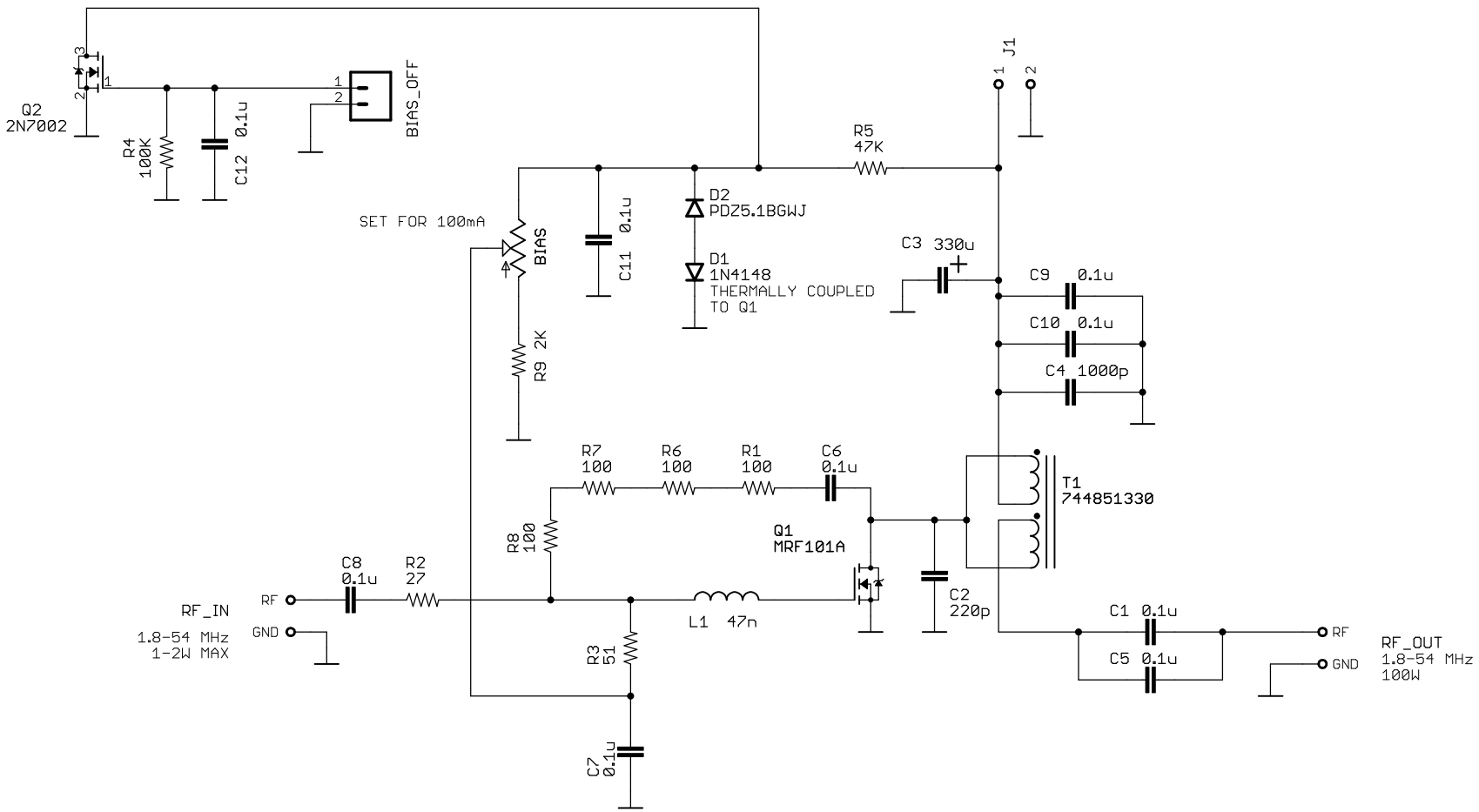

MOUNTING HOLES

MRF-101 100W 1.8-54 MHz	
TITLE: MRF101 EVB Rev B	
Document Number: A100W-JCV	REV: B
Date: 9/11/2019 8:31 AM	Sheet: 1/1