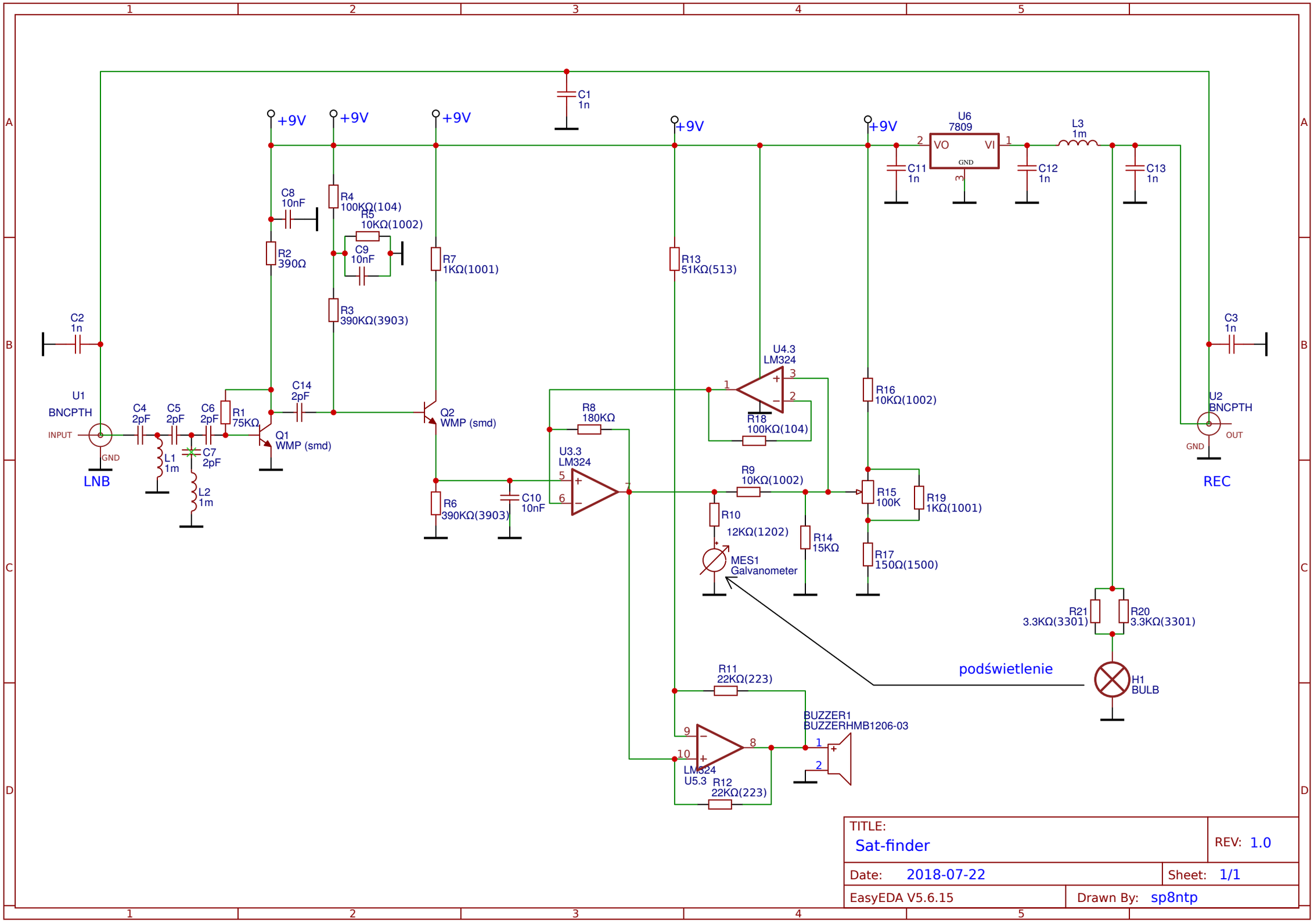

TITLE: Sat-finder	REV: 1.0
Date: 2018-07-22	Sheet: 1/1
EasyEDA V5.6.15	Drawn By: sp8ntp